FADE Phase 2 Machining Project Guide - Vortex Block

Collaborators: Annicchiarico, Kackar, Alpuerto, Amadeo, Valerio, Plant, Oh

Statement of Purpose:

Vortex block is a machining project intended to increase your familiarity with machining and design for manufacturing. You will learn how to measure and cut the features of the part in the UCLA student shop with the tools available to you.

RULES:

- Follow all instructions from the shop supervisors, including Jose, Dirk, and Travis.
- Ask for help and immediately inform supervisors when a problem occurs.
- Print the part drawing. Avoid using phones or laptops in the machine shop.
- Follow all personal safety measures, as listed below:
    - Wear long pants, short sleeves, and eye protection when in the shop.
    - Do not wear loose items or items which may get caught in a machine. This means that your hair should be above your shoulders, no long sleeves, no wristwear, no rings, no jacket strings, and no loose neck jewelry.
    - Machine with a buddy (can be anybody else in the shop).
- Only approach a machine if you know how to use it, and only perform safe operations.
- Simple questions can be answered before machining with a suitable reference or online search. ASME officers, FADE mentors, and the books in the ASME lab are useful resources.
- Clean up when you are done.

Getting good tolerances (within 0.01'' or better):

Be careful. Machining is about (1) measuring and (2) making known cuts.

1. Measuring with a caliper, keeping the jaws square to the feature you are measuring. This means that there isn't any play between the jaws of the caliper when you are making a measurement.
2. Making known cuts starts with (2a) sturdy setups for the part and the cutting tool. For the part and the tool, both minimizing the stick-out and maximizing the surface area of the support will reduce deflections during cutting. The next step is (2b) indicating/referencing off the part. *By knowing the position of the cutting tool with respect to the part, you can perform cuts which should change your measurements in a known manner.* Dials, digital readouts (DROs), and linear measurement devices are your friends for remembering where the tool is in space. The last step is (2c) minimizing cutting forces. Use cutting fluid and reasonable depths of cut (<0.020''). Try to understand which direction deflection will occur during cutting.

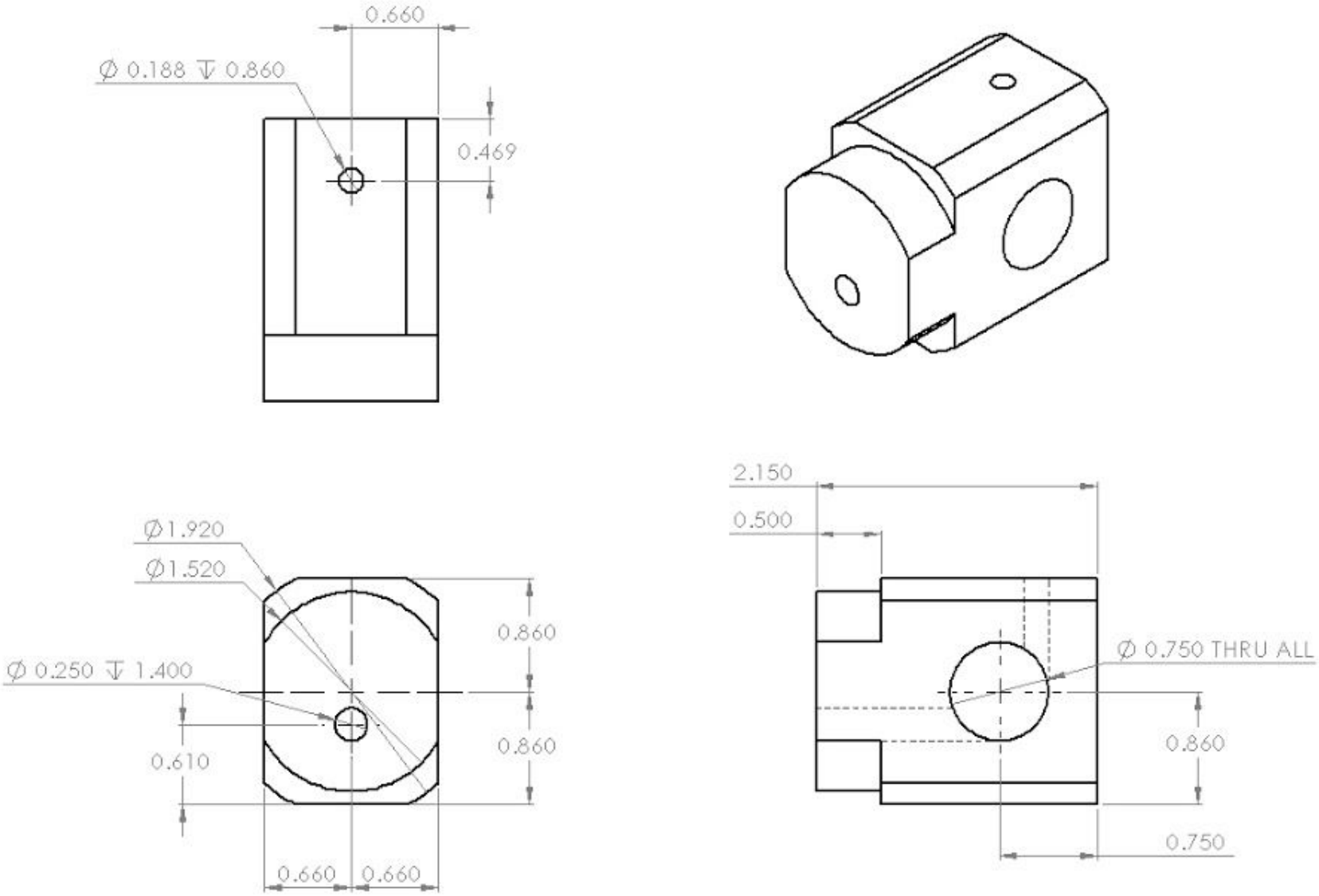

ALL DIMENSIONS IN INCHES UNLESS OTHERWISE STATED
Tolerance on hole diameters: 0.005"
Tolerance on all other features: 0.010"

Some tips for drilling operations:

- Use a caliper (to measure) and a piece of tape or a marker to mark off (indicate) the necessary depth of cut on the drill bit. You can also measure depth on the tailstock (lathe) and quill & knee (mill), indicating off the face of the part.
- Plan to center drill, then drill. If you use a large enough center drill, you can simultaneously center drill and chamfer the hole 😎
- Use brakes to secure your feed as you drill.
- Use peck drilling: removing the drill bit periodically to ensure chips are evacuated.

Lathe (3 or 6 jaw chuck) and bandsaw operations:

1. Measure and mark the appropriate length to turn (the part length plus room for cutoff) with the height gauge and a sharpie (see figure 3).
2. Face the part. You may need to set up a cutting tool on center. Depending on the tool, you can also set the tool angle in a way that allows both facing and turning without readjustment. Facing also allows you to indicate 0 in the axial direction of the part.
3. Turn the part to its outer diameter (1.920'') along its length (up to the line you marked). Use the cross feed to set the depth of cut to less than 0.020''. Move the carriage to take your first pass, then use the DRO to indicate 0 in the part's radial direction. Use the caliper to measure.

   Optional feature: make a 0.5'' long 'barrel' for the block by turning the end down to 1.520''. Use several different cuts to make the corner 90°.

4. Cut off the excess stock (figure 3) using a bandsaw. Ask if you do not know how to use the bandsaw.
5. Face, indicate, and measure the freshly cut side of the part. Face the part to its length dimension (2.150'').
6. Clean your work areas from top to bottom. Use the compressed air to clean the machines and then the broom to clean the floor.

Mill operations:

1. Fix the part in the vise. The part should not be able to move. Use parallels or a V-block as needed.
2. Set up an endmill and collet which can cut the part. Ask for help if you can't figure out how.
3. Touch off to indicate Z = 0 as in figure 5.
4. Mill to the depth of the flats. From the drawing, the large flat's depth is the outer radius minus the distance from the center: 1.920''/2 - 0.660'' = 0.960'' - 0.660'' = 0.3'' deep. You will need to flip the part in the vise to mill the opposite side.

Once you've made two parallel faces, you can grip them in the vise to mill the shallow flats. These are 0.960'' - 0.860'' = 0.1'' deep.

5. Drill the inlet hole using the mill. Take off the cutting tool and put a drill chuck in the spindle. Use an edge finder to indicate the part, so you know where to make the hole. If you use a stop, you will be able to place the part back in the vise without having to use the edge finder again later. Also, since the part is flush with the vise, you can indicate the vise or the part to zero the Y DRO. Use an appropriate center drill and then a 3/16'' = 0.1875'' drill bit to drill the inlet to its depth, 0.860''.
6. Drill the outlet hole. Make sure you position the outlet correctly with respect to the inlet (refer to the drawing).
7. Flip the part again and drill the vortex chamber, the 0.75'' hole. You may need to re-indicate the part. See step 5 for ideas about how to avoid re-indicating. Note that you will need to step up in drill bit sizes; 0.75'' is a large diameter for a hole.
8. Inspect the part and use a file, belt-sander, or oversized drill bits to deburr the sharp edges.
9. Clean your work area from top to bottom. Use the compressed air to clean the machine then the broom to clean the floor.

That's all!

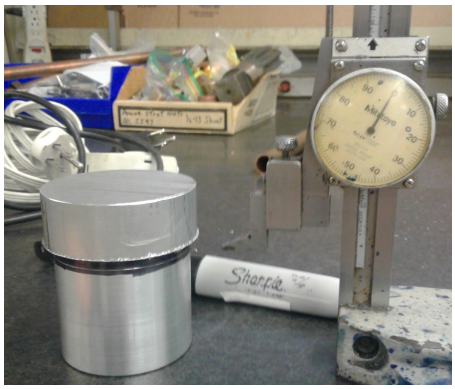

Figure 1: Marking the 'no-go' line using the height gauge. Measure 0 from the flat table, and account for facing the end of the part and the bandsaw blade width for cutting off excess.

Figure 2: A turned-out part on the 3-jaw lathe. You can ignore the drill bit, drill chuck, and the hole in the part; these were made by mistake.

Figure 3: Cutting off the excess in the bandsaw. Using a vise to grip the part is recommended.

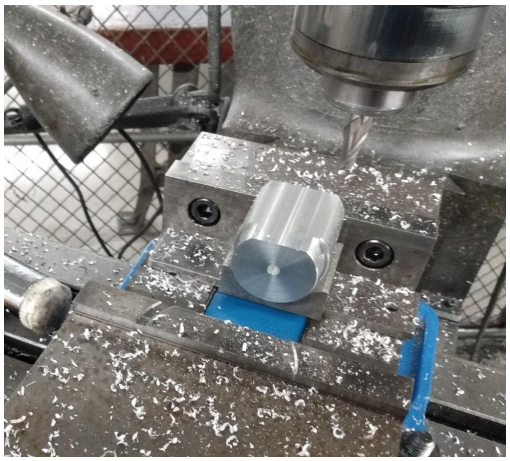

Figure 4: Milling the first flat. A short V-block on top of parallels is in use to raise the part.

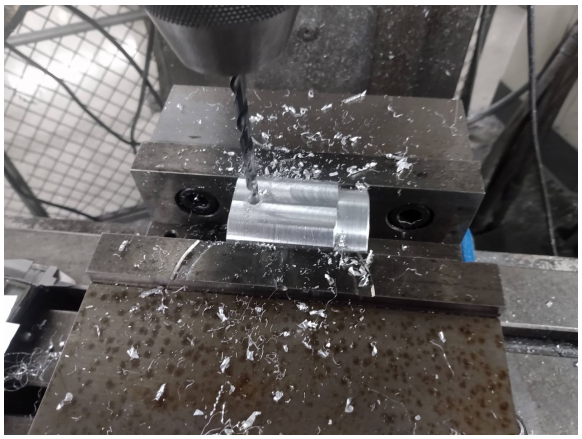

Figure 5: Drilling the inlet hole. No stops were used while milling the flats, but could have been helpful to avoid having to indicate the part in the X-direction.

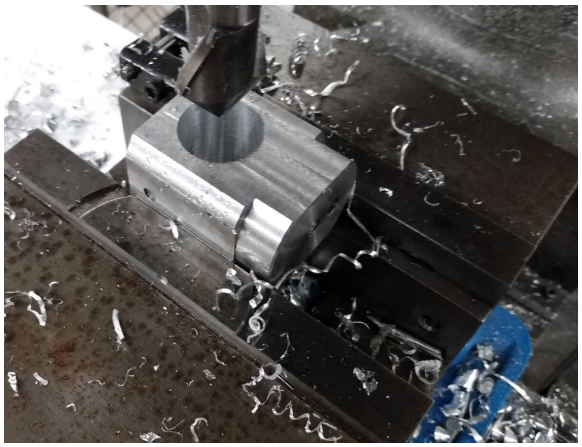

Figure 6: Drilling the vortex bore. The large hole diameter requires drilling progressively larger holes in the same position.